Product: **KLUDI concealed bath/shower mixer DN 15**

Ref.: **33434**

Product description

concealed bath/shower mixer DN 15
pre-installation set
in-wall installation
flow class BB
ceramic cartridge with hot water safety device
including adhesive cuff
for concealed dry-installation
without trim set
noise group I, P- IX 97734/IBB
Optimal function only in combination with
KLUDI products

Product picture

Advertisement

* KLUDI GmbH & Co KG KLUDI concealed bath/shower mixer item no. 33434
** ceramic cartridge with hot water safety device Ø 41 mm, DIN EN 817
*** brass, DIN 50930-6
**** as pre-installation set, without trim set

concealed bath/shower mixer, manufacturer KLUDI GmbH & Co KG KLUDI concealed bath/shower mixer pre-installation set item no. 33434, DN 15, brass, ceramic cartridge with hot water safety device Ø 41 mm, noise level DIN EN 4109 group I, report no. P- IX 9734 / IBB, flow class B B (max. 0,42 l/s), installation depth 70 till 95 mm, type: concealed shower or bath/shower mixer pre-installation set, including adhesive cuff for concealed dry- installation, protection against back flow: with wall supply in acc. to DIN EN 1717 KLUDI item no. 6306105-00 for shower installations / with wall supply KLUDI item no. 6306105-00 and pipe interrupter 1077200-00 (for use with bath filling waste- and overflow sets) for bath and shower installations (1077200-00 not necessary if using with wall spouts), for pressure type water heater, for continuous line heater, PN 10, Optimal function can only guaranteed in combination with KLUDI products

Dimensional drawing

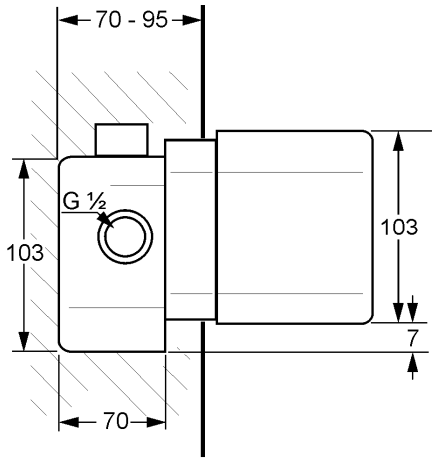
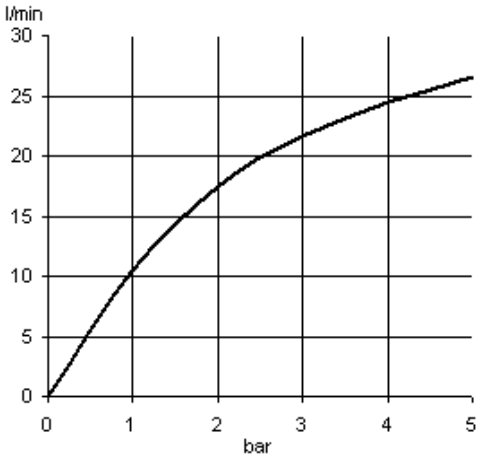
Flow rate diagram