Distributed by
ANBI
www.anbisolutions.com

V5328A

FLANGED LINEAR VALVE PN16 DN50~ DN80 HIGH CLOSE-OFF PRESSURE RATING

SPECIFICATION DATA

GENERAL

These single seated valves are used for modulating control of hot / chilled water or steam in heating, ventilating and air conditioning systems.

The valves can be operated by linear actuators ML6420/ ML6425 or ML7420/ML7425 or by pneumatic actuators MP953.

FEATURES

- **Iron body with flanged end connections**
- **Low seat leakage rate**
- **High Close-off Pressure Rating (1000kPa)**
- **Metal to metal seating for long life span**
- **Self adjusting packing**
- **Accurate positioning to ensure state of the art temperature control**
- **Easy mounting of direct coupled electric and pneumatic actuators**
- **Approved according to DIN 32730**

SPECIFICATIONS

Action	Stem down to close
Nominal pressure rating	PN16
Plug	Pressure balanced plug
Flow characteristic	Equal percentage, n_{gl} = 3.4
Rangeability	50:1
Leakage rate	≤0.03 % of k_{VS}
Stroke	20 mm
Valve body	
End connections	Flanged per ISO 7005-2
Material	Cast iron (GG25)
Dimensions	See Fig. 1
Trim	
Seat	Stainless steel, replaceable
Stem	Stainless steel
Plug	Stainless steel, skirt guided
Packing	Spring loaded PTFE cone rings
Medium temperature and pressure	2...120 °C; max. 1600 kPa 120...150 °C; max. 1400 kPa 150...170 °C; max. 1370 kPa
Maximum temperature differential in alternating hot/cold water use	60 K

SIZES AND FLOW CAPACITIES

Order Number	Valve Size	k_{VS}
V5328A1161	DN50 (for Water)	40.0
V5328A1179	DN65 (for Water)	63.0
V5328A1187	DN80 (for Water)	100.0
V5328A2003	DN50 (for Steam)	40.0
V5328A2011	DN65 (for Steam)	63.0
V5328A2029	DN80 (for Steam)	100.0

REPAIR PACKING KIT

Part No.: R 43 176 754 - 001 (DN15...DN32)
R 43 176 754 - 002 (DN40...DN80)

INSTALLATION

- Water should meet VDI 2035 requirements.
- Do not install valve with stem below the horizontal.
- Fluid flow must correspond with the arrow direction on the valve body.
- The installation of a strainer is strongly recommended.

ACTUATORS

Electric actuators

Stem Force/Actuator		
600 N	**600 N Spring Return**	**1800 N**
ML6420A ML7420A	ML6425A,B ML7425A,B	M6421A M7421A

CLOSE OFF PRESSURE RATINGS in kPa

Electric actuators

Actuator		Valve Size		
Model	**Force**	**DN50**	**DN65**	**DN80**
ML6420A, ML6425A,B ML7420A, ML7425A,B	600 N	1000	1000	1000
ML6421A, ML7421A	1800 N	1600	1600	1600

DIMENSIONS (mm)

Valve

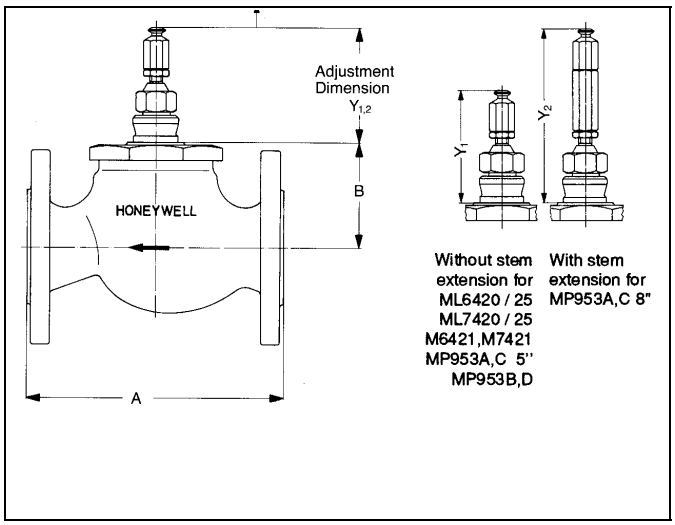

Fig. 1 V5328A

Valve Size	A	B	Y_1 *	Y_2 *
DN50	230	93	89	133
DN65	290	112	Valve	Valve
DN80	310	114	closed	close

*** = Adjustment dimension**

Electric actuators

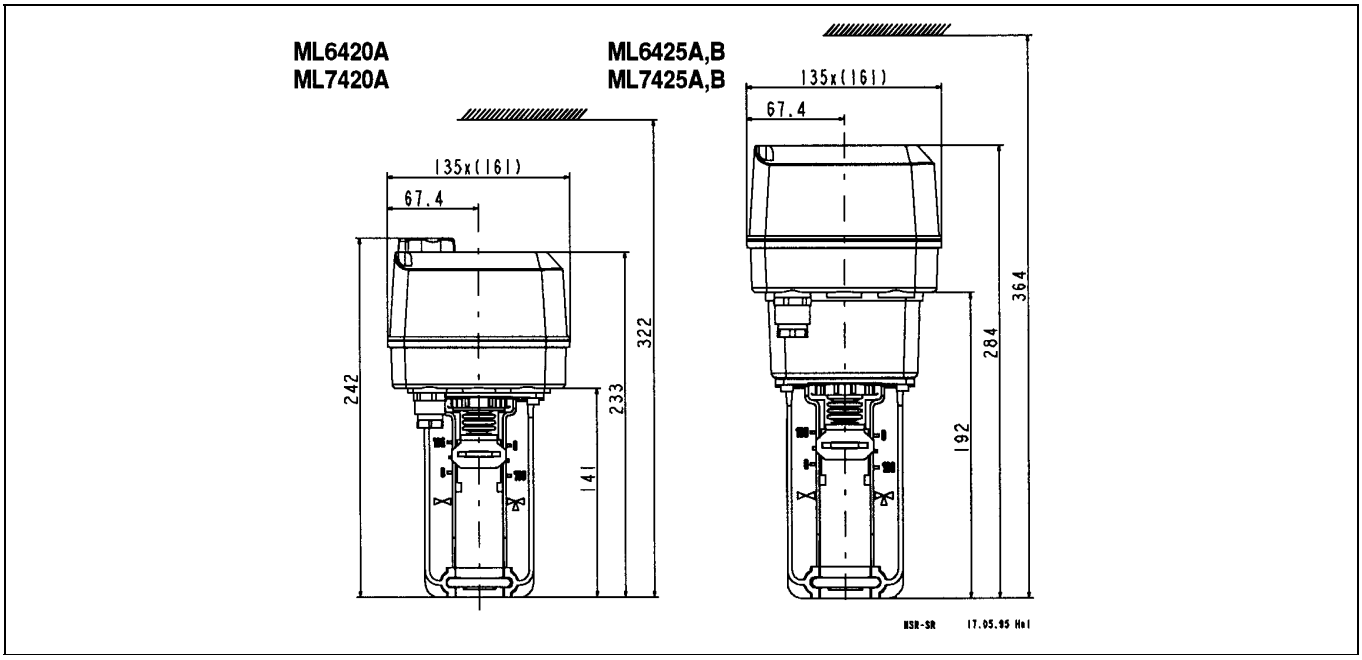

Fig. 3 ML6420A/ML6425A,B and ML7420A/ML7425A,B

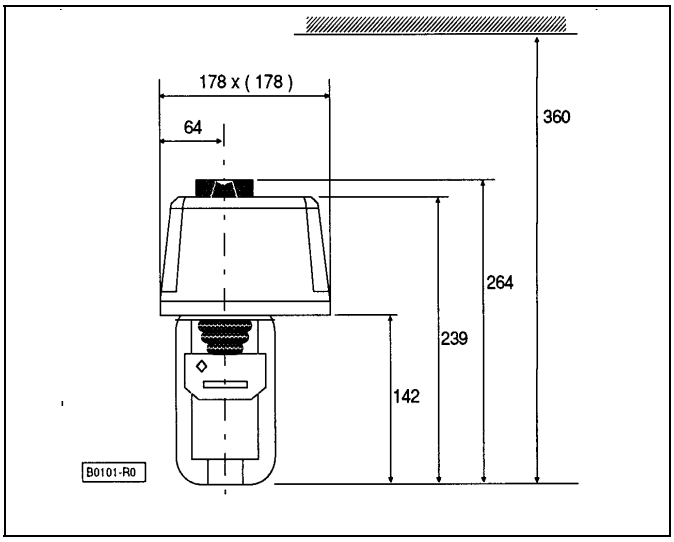

Fig. 4 ML6421A/ML7421A

Actuator O.S. No.	DIN Registration No.
ML6425A3022 ML6425B3013 ML7425A3013 ML7425B3012	1F13995

NOTE: V5328A valves in combination with the following actuators are approved according to DIN 32730:

Distributed by
ANBI
www.anbisolutions.com